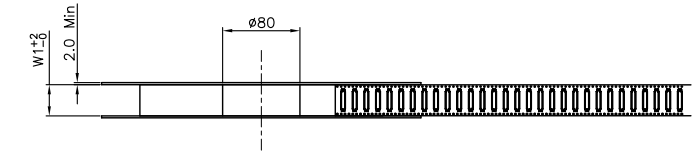

NOTES:
1. 10 SPROCKET HOLE PITCH CUMULATIVE TOLERANCE.±0.20mm
2. CARRIER CAMBER NOT TO EXCEED 1mm IN 250mm.
3. ALL DIMENSIONS MEET EIA-481-C REQUIREMENTS.
4. MATERIAL: BLACK ANTI-STATIC POLYSTYRENE.
5. THICKNESS: 0.50 ± 0.05 mm.
6. PACKING LENGTH PER 13" REEL:12.60METERS.
7. COMPONENT LOAD PER 13" REEL:1000PCS
8. PEELING OFF FORCE OF TOP TAPE 0.1N~0.7N(10.2gf~100gf).

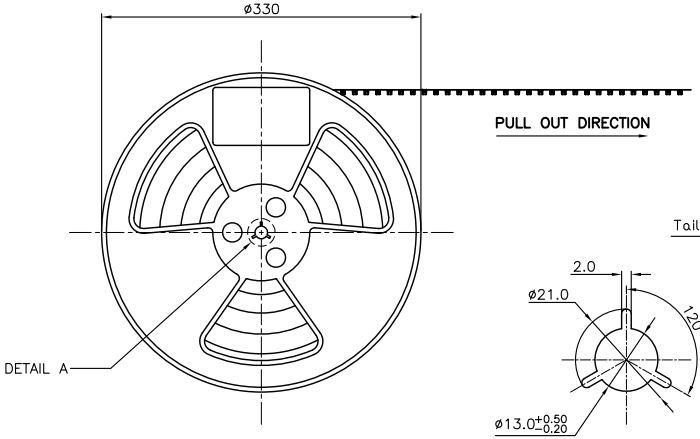

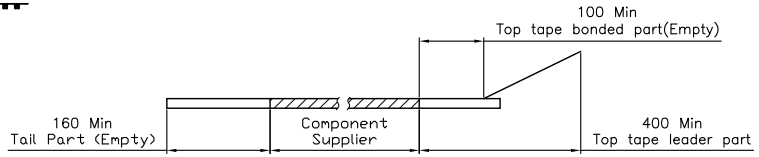

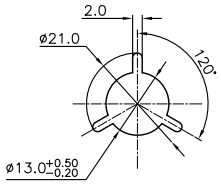

DETAIL A

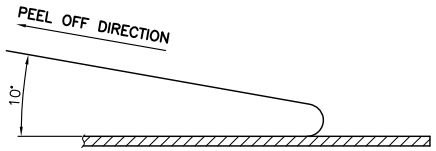

PULL OUT DIRECTION

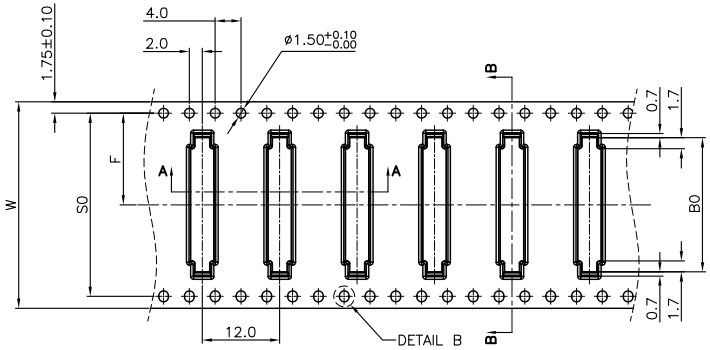

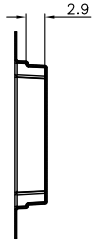

SECTION B-B
SCALE 1:1

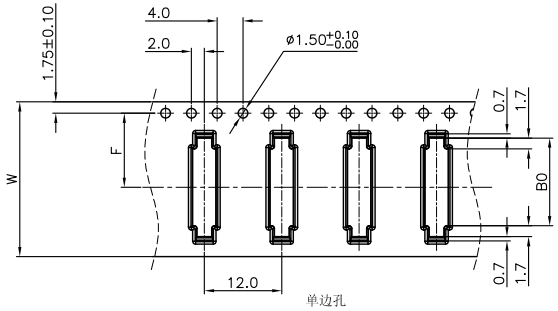

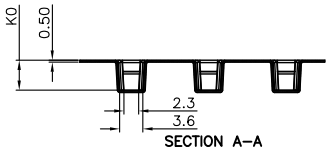

SECTION A-A
SCALE 1:1

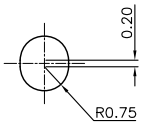

DETAIL B
SCALE 5:1

CKTS	B0±0.10	K0±0.10	W	W1	F	S0±0.10
4	6.80	4.70	16+0.3/-0	16.4	7.5±0.10	单边孔
5	7.30					
6	7.80					
7	8.30					
8	8.80					
9	9.30		24+0.3/-0	24.4	11.5±0.10	
10	9.80					
11	10.30					
12	10.80					
13	11.30					
14	11.80					
15	12.30					
16	12.80					
17	13.30					
18	13.80					
19	14.30					
20	14.80					
21	15.30					
22	15.80		32±0.30	32.4	14.2±0.10	28.4
23	16.30					
24	16.80					
25	17.30					
26	17.80					
27	18.30					
28	18.80					
29	19.30					
30	19.80					
31	20.30					
32	20.80					
33	21.30					
34	21.80					
35	22.30	5.25	44±0.30	44.4	20.2±0.15	40.4
36	22.80					
37	23.30					
38	23.80					
39	24.30					
40	24.80					
41	25.30					
42	25.80					
43	26.30					
44	26.80					
45	27.30					
46	27.80					
47	28.30					
48	28.80					
49	29.30					
50	29.80					
51	30.30					
52	30.80					
53	31.30					
54	31.80					
55	32.30					
56	32.80					
57	33.30		56±0.30	56.4	26.2±0.15	52.4
58	33.80					
59	34.30					
60	34.80					

昆旺精密连接器有限公司 APPROVED 工程部 WWW.VIGORCONN.COM

DATE	OLD REV	NEW REV	ECN	DESCRIPTION	CHECK	APPROVAL

GENERAL TOLERANCE
.X ±0.30
.XX ±0.20
.XXX ±0.10

PROJECT

昆旺精密连接器有限公司
VIGORCONN PRECISION CONNECTOR CO.,LTD

APPROVAL	CHECK	DRAWN	DATA
		Yu wei	2012-09-09

PART NO.

TITLE.

UNIT	SCALE	NUMBER	REV
MM	1 : 1	A-000	A