NOTE:
1.MATERIAL:
BOX: FIBREBOARD, CORRUGATED, DOUBLE WALL.
TAPE: POLYSTYRENES, HEAT-RESISTANT TEMPERTURE: 120°C, BLACK COLOR.
REEL: POLYSTYRENES, HEAT-RESISTANT TEMPERTURE: 70°C, BLUE COLOR.
BAG: POLYETHYLENE, HEAT-RESISTANT TEMPERTURE: 100°C.
2.PEELING STRENGTH: 0.1 ~ 1.3 N (10 ~ 130 GRAMS)
3.PEELING SPEED: 300 mm/min.
4.EACH BAG SHALL BE INCLUDED DESICCANT.

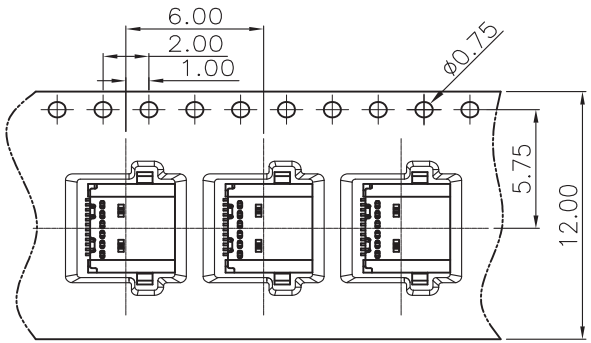

① 产品入载带示意图

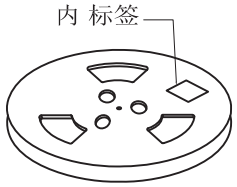

② 卷盘贴标签示意图

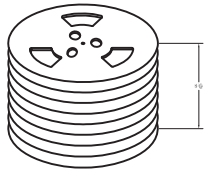

③ 10盘产品叠层示意图

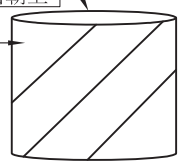

④ 7盘产品入防水袋示意图

图三

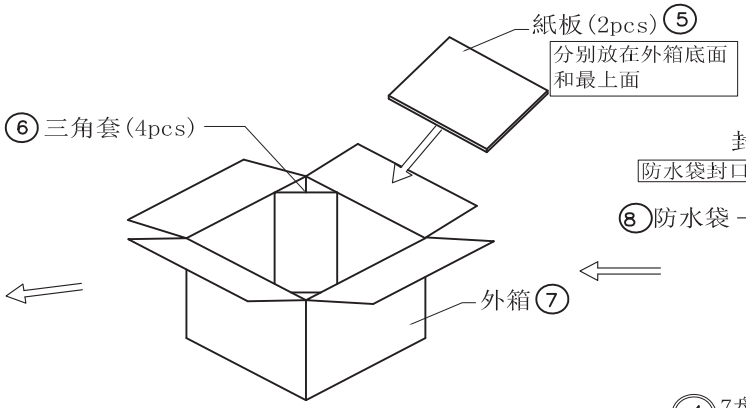

⑤ 产品入外箱示意图

图四

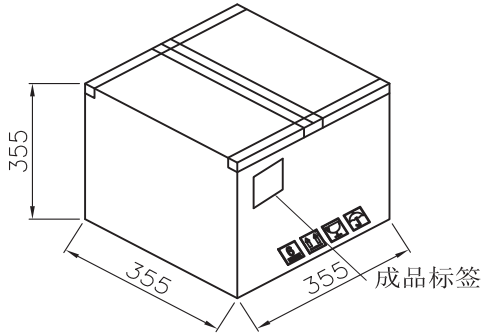

⑥ 外箱封箱示意图

1000	10	10000 PCS	-- KG	-- KG
PCS/ REEL	REELS/ CARTON	QUANTITY	GROSS WEIGHT	NET WEIGHT

昆旺精密连接器有限公司 APPROVED 工程部 WWW.VIGORCONN.COM

DATE	OLD REV	NEW REV	ECN	DESCRIPTION	CHECK	APPROVAL

GENERAL TOLERANCE
.X ±0.30
.XX ±0.20
.XXX ±0.10
PROJECT

昆旺精密连接器有限公司
VIGORCONN PRECISION CONNECTOR CO.,LTD

APPROVAL	CHECK	DRAWN	DATA
Kim Huang	Jova Lau	Xiao Wen Xuan	2019/08/15

PART NO. KWUB31B-16Cx-LVxTA-16009

TITLE. USB3.1 C-Type-母座

UNIT	SCALE	NUMBER	REV
MM	1:1	A-00	A